BEAVER 50

PIPE CUTTER, CARRIAGE & REAMER

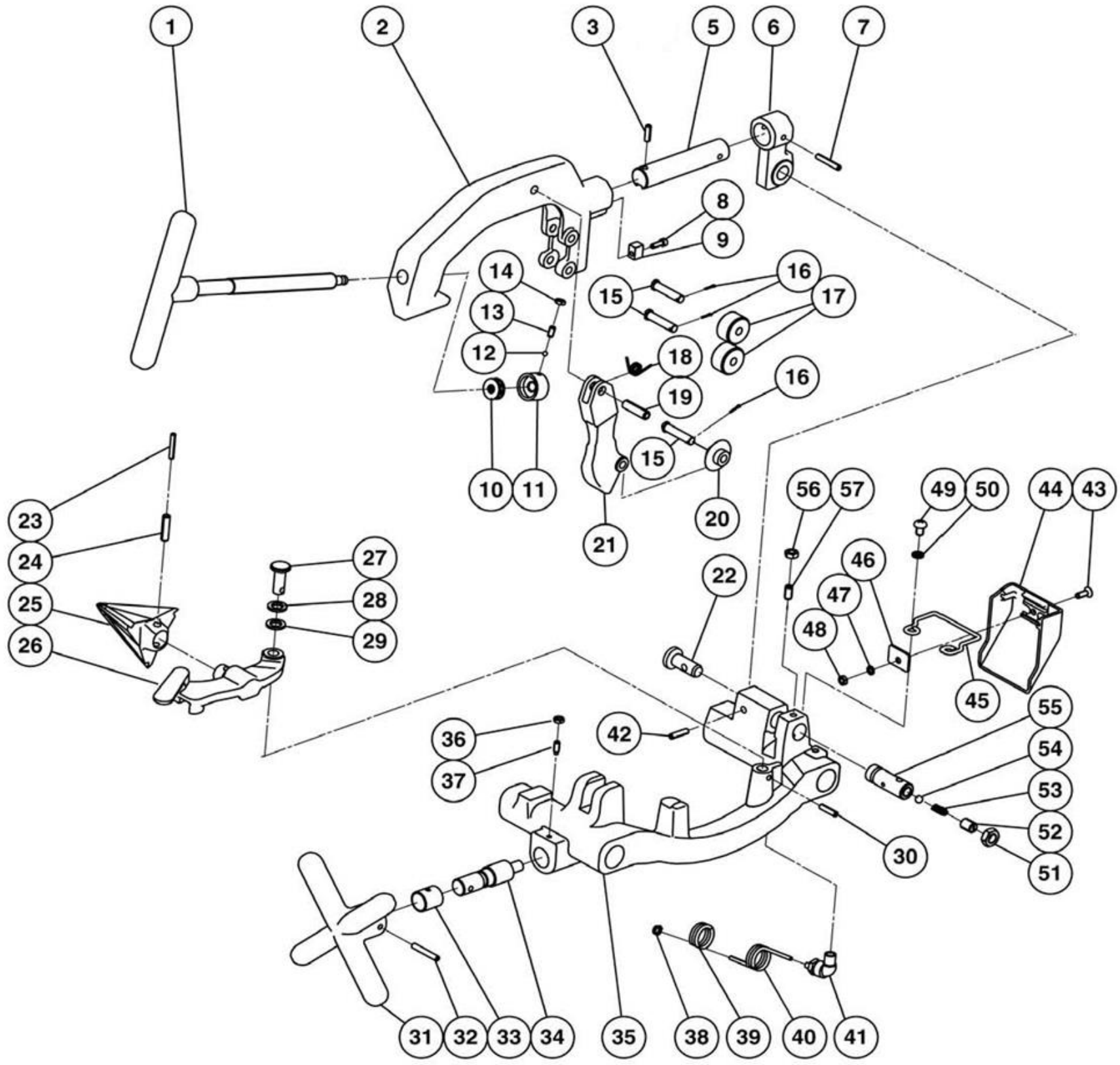

PIPE CUTTER, CARRIAGE & REAMER

No.	Code No	Parts Name	Qty	Remark
set	BE555	Pipe Cutter Assembly (1-22,42)	1	
1	BE560	BE50 Cutter Handle Complete	1	
2	BE556	BE50 Cutter Body	1	
3	83036	Spring Pin φ6x20L	1	
5	BE559	BE50 Cutter Guide Bar	1	
6	BE558	BE50 Cutter Bracket	1	
7	83089	Spring Pin φ6x36L	1	
8	80158	Hex Socket Bolt M5x15L	1	
9	59510	Cutter Key	1	
10	84140	Thrust Bearing 51100	1	
11	29505	Feed Screw Head	1	
12	88571	Steel Ball 3/16	1	
13	80361	Hex Socket Set Bolt M6x12L	1	
14	81019	Hex Nut M6	1	
15	21511	Cutter Blade Set Pin	3	
16	83375	Sprit Pin M2 x 15	3	
17	BE884	Cutter Roller	2	
18	63503	Bracket Spring	1	
19	83098	Spring pin φ10x36L	1	
20	04510	Cutter Blade NO3	1	
21	BE557	BE50 Cutter Blade Holder	1	
22	BE562	BE50 Cutter Pin	1	
set	BE565	BE50 Reamer Assembly (23-30)	1	
23	83027	Spring Pin φ5x32L	1	
24	83051	Spring Pin φ8x32L	1	
25	BE567	Reamer Blade	1	
26	BE955	BE80 Reamer Holder	1	
27	63604	Holder Pin	1	
28	81116	Spring Washer M12	1	
29	81221	Plain Washer S M12	1	
30	83038	Spring Pin φ6x24L	1	
set	BE917	Rack Handle Complete (31-34)	1	
31	BE874	Rack Handle	1	
32	83070	Spring Pin φ6x40L	1	
33	21415	Pinion Metal	1	
34	21414	Rack Pinion	1	
35	BE551	BE50 Carrige	1	
36	81019	Hex Nut M6	1	
37	80404	Hex Socket Set Bolt M6x22L	1	
38	70123	Binding Band	1	
39	BE552	Protect Spring	1	
40	63260	Urethane Coiling Tube NL06-10	1	
41	85045	Elbow L4N6x4-PT1/4	1	
42	83051	Spring Pin φ8x32L	1	
43	82265	Flat Head Screw M6x15L	1	
44	BE920	BE80 Splashproof Plate	1	
45	BE897	BE80 Splashproof Plate Holder	1	
46	AS378	Holder Plate	1	
47	81251	Spring Washer M6	1	
48	81019	Hex Nut M6	1	
49	82363	Pan Head Screw M8x12L Blacken	2	
50	81254	Spring Washer CM8	2	
51	81011	Hex Nut M12	1	

No.	Code No	Parts Name	Qty	Remark
52	20410	Oil Adjust Screw	1	
53	22404	Oil Adjust Spring	1	
54	88573	Steel Ball 5/16	1	
55	59409	Die Head Set Pin	1	
56	81009	Hex Nut M8	1	
57	80370	Hex Socket Set Bolt M8x15L	1	

BEAVER 50

HAMMER CHUCK, SCROLL & GEARS

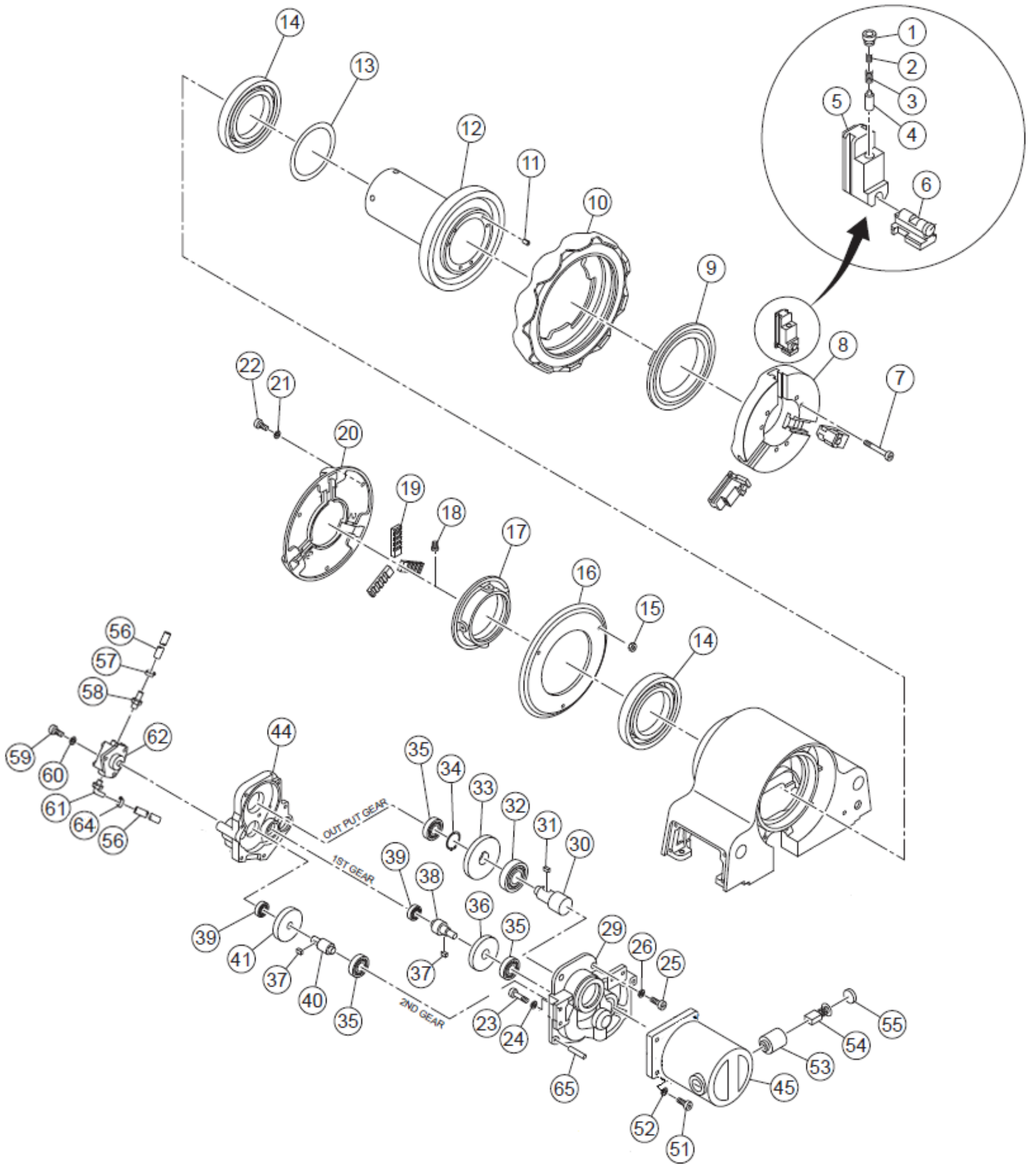

HAMMER CHUCK, SCROLL & GEARS

No.	Code No	Parts Name	Qty	Remark
1	BE508	BE50 Chuck Bolt	3	
2	BE507	BE50 Hammer Chuck Spring B	3	
3	BE506	BE50 Hammer Chuck Spring A	3	
4	BE509	BE50 Hammer Chuck Pin	3	
5	BE502	Hammer Chuck Jaw Assembly	1set	
6	BE826	BE50 Jaw Insert Complete	1set	
7	80173	Hex Socket Bolt M6x55L	6	
8	BE510	BE50 Hammer Chuck Body	1	
9	63103	Hammer Chuck Scroll	1	
10	BE608	Hammer Chuck Outer Ring	1	
11	63234	Pre-Load Spring	6	
12	BE524	BE50 Spindle Gear Complete	1	
13	63238	Thrust Plate	1	
14	84422	Ball Bearing 6015 2RS	2	
set	BE545	BE50 Scroll Assembly (15-22)	1	
15	81019	Hex Nut M6	3	
16	BE547	BE50 Scroll Cap	1	
17	BE548	BE50 Scroll	1	
18	59310	Scroll Stop Bolt	4	
19	63307	Scroll Jaw Set	1set	
20	BE546	BE50 Scroll Body	1	
21	81251	Spring Washer M6	3	
22	82209	Pan Head Screw M6x16L	3	
set	BE521	BE50 Drive Complete (25-44)	1set	
23	80167	Stop Bolt M6 x 25	4	
24	81251	Spring Washer M6	4	
25	80167	Stop Bolt M6 x 25	6	
26	81251	Spring Washer M6	6	
29	BE526	BE50 Gear Box	1	
30	BE528	BE50 Output Shaft Pinion	1	
31	20212	Key 6x6x13	1	
32	84165	Ball Bearing 6304ZZ	1	
33	BE529	BE50 Output Shaft Reduction Gea	1	
34	83307	C Snap Ring S-20	1	
35	84116	Ball Bearing 6201ZZ	3	
36	BE531	BE50 1st Shaft Reduction Gear	1	
37	20209	Key 5x5x13	2	
38	BE530	BE50 1st Shaft Pinion	1	
39	84188	Ball Bearing 6301ZZ	2	
40	BE532	BE50 2nd Shaft Pinion	1	
41	BE533	BE50 2nd Shaft Reduction Gear	1	
44	BE527	BE50 Gear Box Cover	1	
45	BE602P	MOTOR TYPE-P 110-120V	1	
45	BE603P	MOTOR TYPE-P 220-240V	1	
*	70925	ARMATURE TYPE-P 110-120V	1	
*	70927	ARMATURE TYPE-P 220-240V	1	
**	70924	STATOR COIL TYPE -P 110-120V	1	
**	70926	STATOR COIL TYPE -P 220-240V	1	
51	80167	Stop Bolt M6 x 25	4	
52	81251	Spring Washer M6	4	
53	70930	Carbon Holder Type-P	2	
54	70929	Carbon Brush Type-P	1set	
55	70931	Carbon Cap Type-P	2	

No.	Code No	Parts Name	Qty	Remark
56	85484	Oil Hose TB-8	2	
57	85612	Hose Clampt M12	2	
58	85083	Connector GES8xPT1/4	2	
59	80165	Hex Socket Bolt M6x18L	3	
60	81251	Spring Washer M6	3	
61	85082	Elbow WES8xPT1/4	1	
62	BE43L	Gear Pump 27A	1	
64	85602	TUBE CLAMP 12	1	
65	83466	Parallel Pin M8 x 28Lm6	1	

BEAVER 50

FRAME & SPINDLE CASE

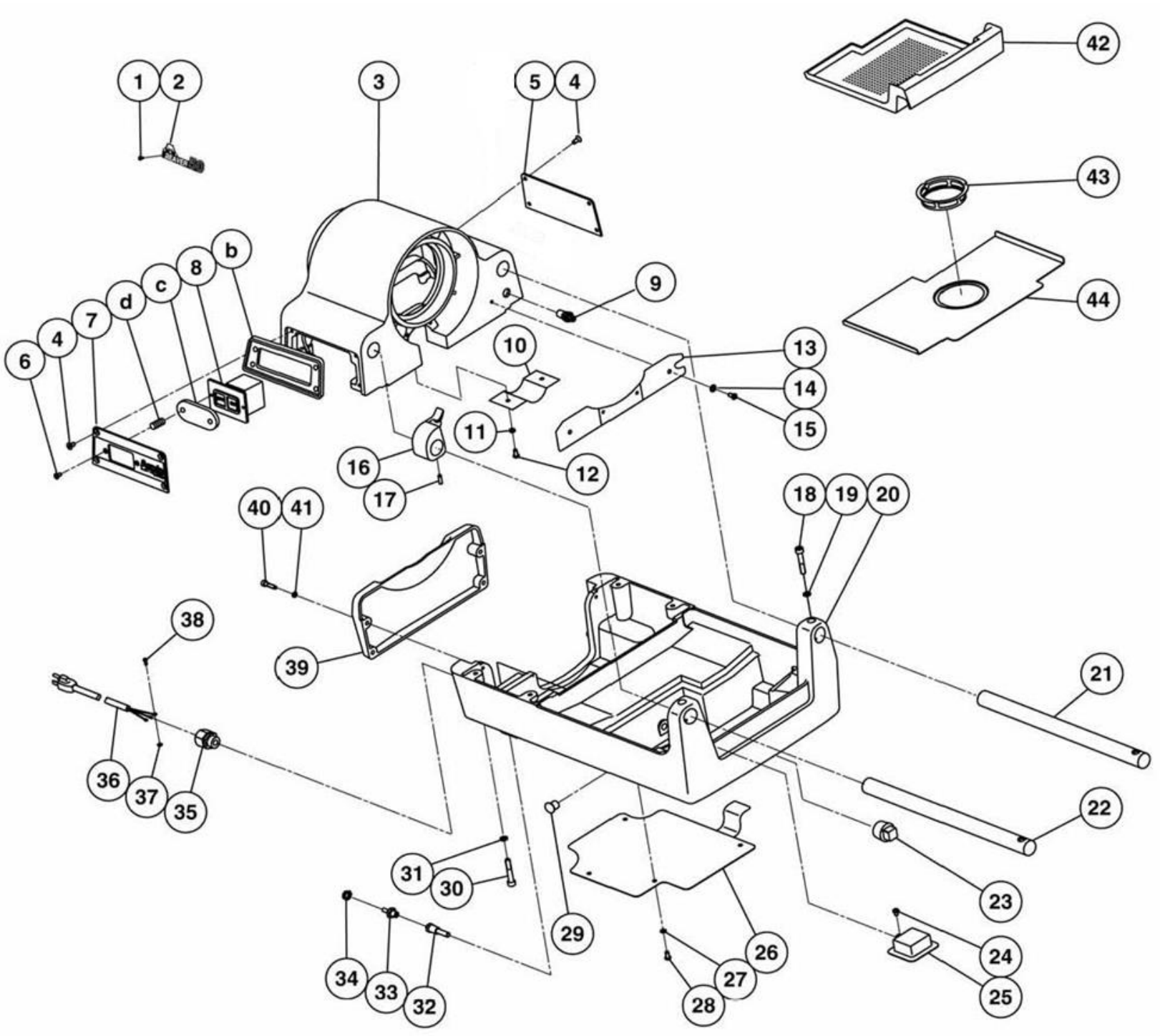

FRAME & SPINDLE CASE

No.	Code No	Parts Name	Qty	Remark
1	82978	Flat Head Tapping Screw M2.5x8L	2	
2	BE539	BE50 Beaver Plate	1	
3	BE525	BE50 Spindle Case	1	
4	82282	Flat Head Screw M6x10L	4	
5	BE536	BE50 Machine Plate	1	
6	82299	Flat Head Screw M3X14L	2	
7	BE535	BE50 Switch Plate	1	
8	87187	Switch BEH2302	1	
b	BE661	BE50 Switch Plate Cover	1	
c	BE983	Switch Cover	1	
d	BE984	Switch Spacer	1	
9	85087	Connector C4N6x4-PT1/4	1	
10	BE537	BE50 Gear Cover	1	
11	81251	Spring Washer M6	1	
12	82250	Pan Head Screw M6x12L	1	
13	BE534	BE50 Oil Cover	1	
14	81251	Spring Washer M6	4	
15	82250	Pan Head Screw M6x12L	4	
16	BE540NY	BE50 Outer Ring Spacer	1	
17	80358	Hex Socket Set Bolt M6x6L	1	
18	80182	Hex Socket Bolt M8x45L	2	
19	81254	Spring Washer CM8	2	
20	BE571	BE50 Frame	1	
21	BE522	BE50 Guide Bar R	1	
22	BE523	BE50 Guide Bar F	1	
23	84249	Plug1/2″	1	
24	82250	Pan Head Screw M6x12L	1	
25	18331	Filter	1	
26	BE686	BE50 Frame Under Cover	1	
27	81251	Spring Washer M6	4	
28	80011	Hex Bolt M6 x 10	4	
29	70694	Hole Cap DP-562	2	
30	80183	Hex Socket Bolt M8x50L	4	
31	81254	Spring Washer CM8	4	
32	BE896	Suction Pipe	1	
33	85083	Connector GES8xPT1/4	1	
34	85602	TUBE CLAMP 12	1	
35	70335	Cord Connector OA-W1611	1	
36	BE939	Power Cord 100-120V	1	
36	BE863	Power Cord 220-240V w/o plug	1	
37	81246	Tooth Lock Washer M6	1	
38	88899	Pan Head Screw M6x8L	1	
39	BE575	BE50 Pump Cover	1	
40	80166	Hex Socket Bolt M6x20L	4	
41	81251	Spring Washer M6	4	
42	BE572	BE50 Chip Pan	1	
43	10304	Strainer	1	
44	BE573	BE50 Oil Tank Lid	1	

No.	Code No	Parts Name	Qty	Remark